SECTION 4 COTD

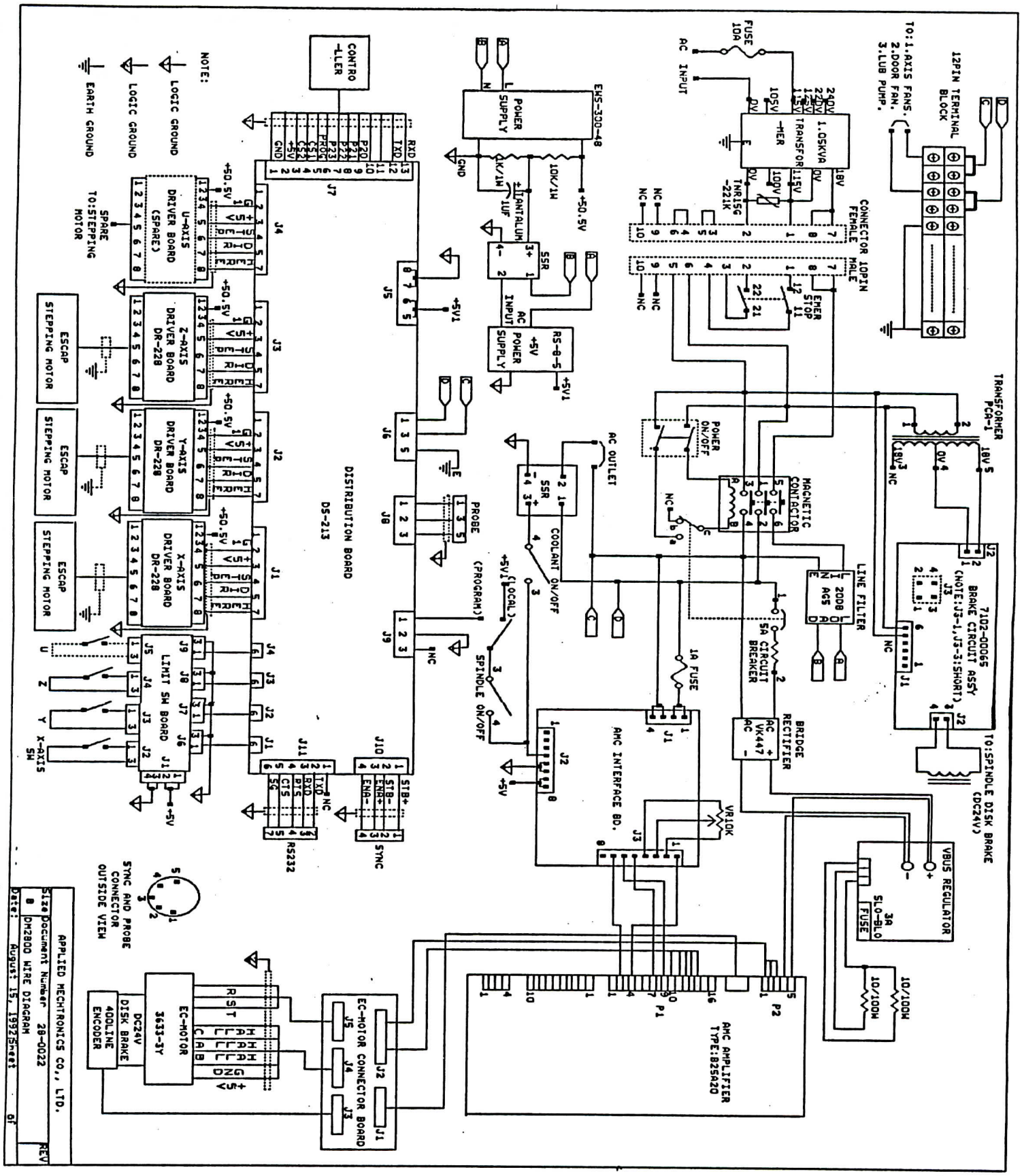

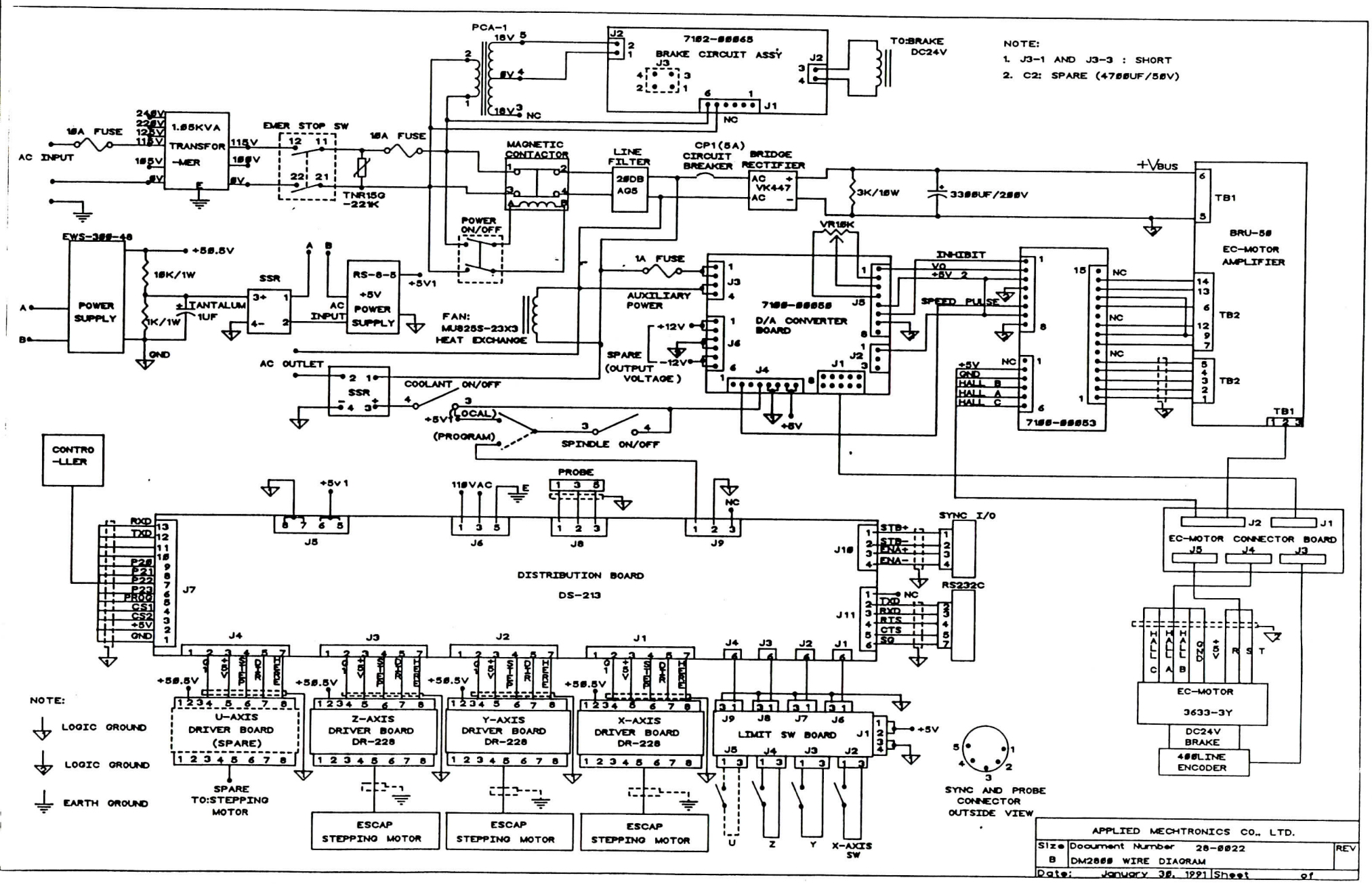
NOTE:
1. J3-1 AND J3-3 : SHORT
2. C2: SPARE (4700UF/50V)
PCA-1
7102-00065
BRAKE CIRCUIT ASSY
TO:BRAKE DC24V
AC INPUT
10A FUSE
1.05KVA TRANSFOR -MER
EMER STOP SW
TNR15G -221K
MAGNETIC CONTACTOR
LINE FILTER
20DB AG5
CP1(5A) CIRCUIT BREAKER
BRIDGE RECTIFIER
VK447
3K/10W
3300UF/200V
+VBUS
TB1
BRU-50
EC-MOTOR AMPLIFIER
POWER ON/OFF
EWS-300-48
POWER SUPPLY
+50.5V
10K/1W
1K/1W
TANTALUM 1UF
SSR
RS-8-5 +5V POWER SUPPLY
+5V1
FAN: MU8255-23X3 HEAT EXCHANGE
1A FUSE
AUXILIARY POWER
SPARE (OUTPUT VOLTAGE)
7100-00050
D/A CONVERTER BOARD
VR10K
INHIBIT
VO
+5V 2
SPEED PULSE
7100-00053
TB2
AC OUTLET
COOLANT ON/OFF
LOCAL
(PROGRAM)
SPINDLE ON/OFF
CONTRO -LLER
PROBE
SYNC I/O
RS232C
DISTRIBUTION BOARD
DS-213
EC-MOTOR CONNECTOR BOARD
U-AXIS DRIVER BOARD (SPARE)
Z-AXIS DRIVER BOARD DR-220
Y-AXIS DRIVER BOARD DR-220
X-AXIS DRIVER BOARD DR-220
LIMIT SW BOARD
SPARE TO:STEPPING MOTOR
ESCAP STEPPING MOTOR
EC-MOTOR 3633-3Y
DC24V BRAKE
400LINE ENCODER
SYNC AND PROBE CONNECTOR OUTSIDE VIEW
X-AXIS SW
NOTE:
LOGIC GROUND
LOGIC GROUND
EARTH GROUND
APPLIED MECHTRONICS CO., LTD.
Size B
Document Number 20-0022
DM2000 WIRE DIAGRAM
REV
Date: January 30, 1991
Sheet of

SECTION 4

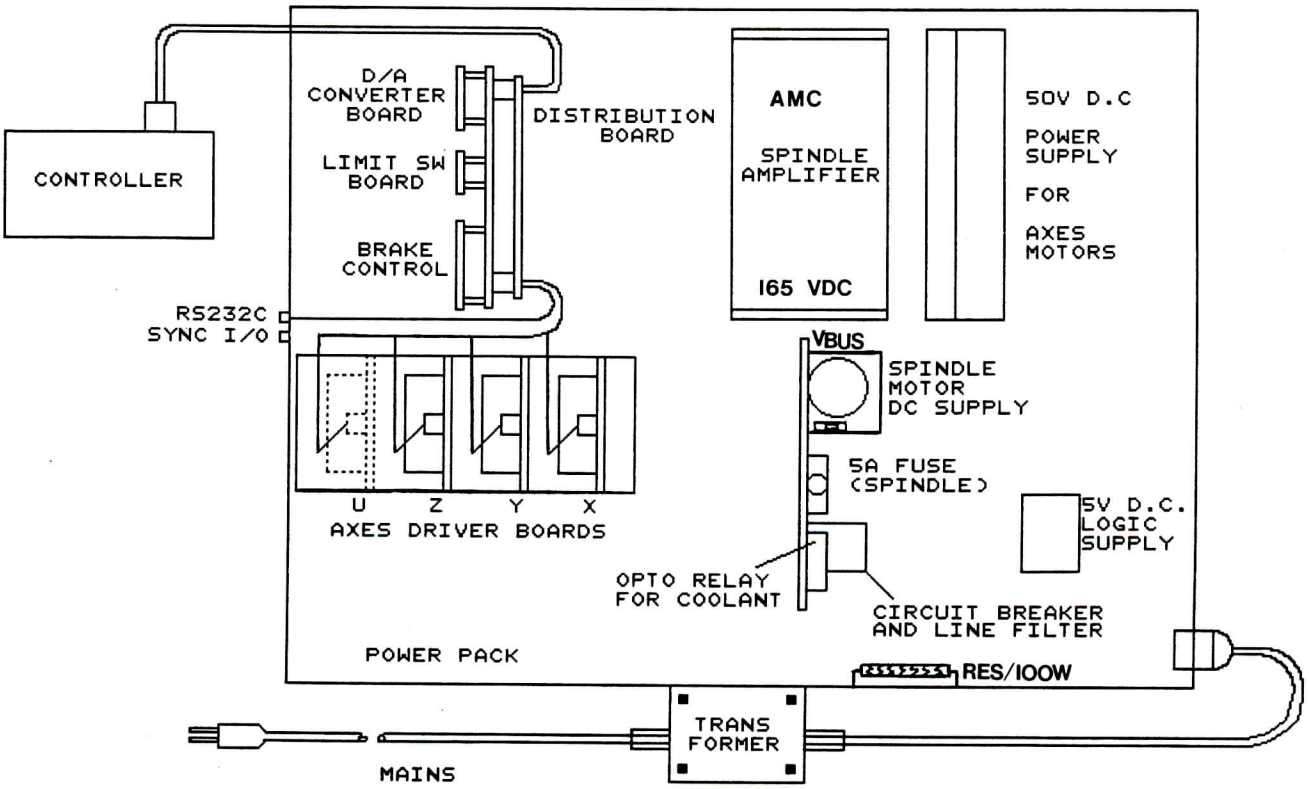

1. Operation overview

Above is the layout of the power pack. On the next page is the block diagram of the electronics.

The controller controls the operation of the machine. Logic signals to control the axes driver boards, the spindle off /on, sync I/O, RS232C are sent to the distribution board which distributes them. The distribution board also collects signals from the limit switches (via the limit switch board), from the axes driver boards (am here) from the sync I/O and RS232C and the probe.

The axes driver boards have signals in (50V DC, 5V, STEP, DIRECTION, AM HERE) through a connector at the back of the board. At the front is the 8 line connector to the synchrostep stepper motor. The u,x,y driver boards are interchangeable, the z is not.

On the power, side the power first goes through a 10A fuse then the emergency switch then the transformer. Internally 115V AC is used and this goes to the power supply switchers and to be rectified for the spindle amplifier. There is a 5A circuit breaker on this line to handle a stalled spindle.

The emergency brake on the spindle works as follows. With power on, the brake relay keeps voltage on across a large capacitor.
When power is turned off via the emergency switch, the relay flips over and connects the stored capacitor energy to the electric brake on the spindle.
There is sufficient energy stored in the capacitor to stop the motor.